Model Question of HSC Examination 2020 (All Board)

Physics Second Paper (Creative)

Sub Code : 1 7 5

Time: 2 Hrs 35 **min** **Full marks:** 50

*[Read the following stems and answer **any five** of the following questions:]*

1. ▶ A Carnot engine absorbs 1400 Joule heat from the source at temperature 510 K and rejects 800 Joule to the sink.

a. What is zeroth law of thermodynamics? 1

b. What do you mean by the heat death of the universe? 2

c. Calculate the efficiency of the engine. 3

d. What steps should be taken in making the efficiency of the engine 54%? Give your opinion with mathematical analysis. 4

2. ★ Two point charges $A = 20 \times 10^{-6}C$ and $B = -40 \times 10^{-6}$ C are placed at a certain distance 1 meter in vacuum.

a. What is doping? 1

b. "The potential of the Earth is zero."– Explain. 2

c. Calculate the value of coulomb force between the two charges. 3

d. Explain mathematically whether the resultant electric field intensity is possible to be zero at a point on the line joining the charges. 4

Teachingbd24.com

3. ▶

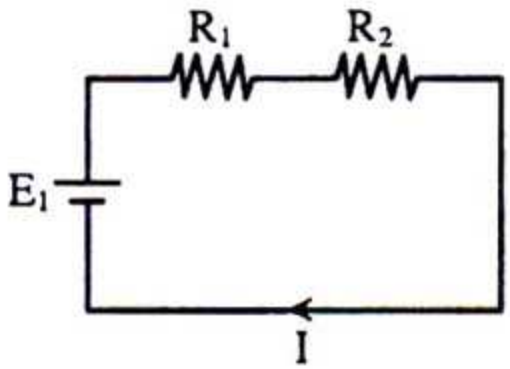

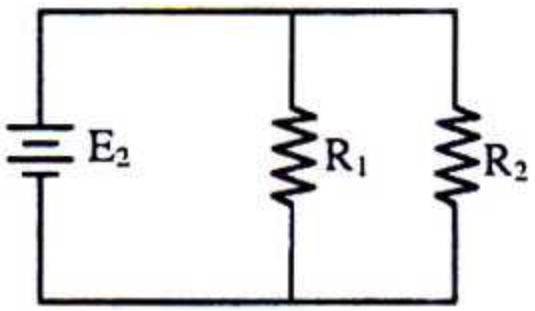

In figure, the resistance wires of 100 ohm each have a length of 0.5 m and radius of 0.2 cm. *[Mirzapur Cadet College, Tangail]*

a. What is called one electron volt? 1

b. "Work done in moving a charge from one point to another point on an equipotential surface is zero"– Explain. 2

c. Find out the value of specific resistance of any wire of the stem. 3

d. Explain mathematically whether E_1 should be more or less than E_2 to produce equal amount of heat by passing current for equal time interval in both the circuits. 4

4. ★ Two eletrons are moving with speed of 0.866c and 0.99c respectively. The rest mass of electron is 9.1×10^{-31}kg.

a. What is work-function? 1

b. Why is the de Broglie wave length of an electron longer than that of a proton although their speeds are equal? 2

c. Calculate the moving mass of the first electron in stem. 3

Teachingbd24.com

d. "The relativistic kinetic energy of the first electron is less than that of the second." Justify the statement with mathematical analysis from the above stem. 4

5. ▶ The radii of curvatures of a concave conves lens are respectively 20 cm. and 40 cm. If an object is placed 40 cm in front of the lens in air, the image of this object is formed at distance 50 cm behind the lens. But the lens is immersed into a liquid of refractive undex 1,25

a. What is called coherent source? 1

b. Why light cannot emerge from a black hole? 2

c. Find there fractive index of the material of the lens in above stem. 3

d. Analyze mathematically what will be the change of the nature of the lens after immersing it into the liquid. 4

6. ▶

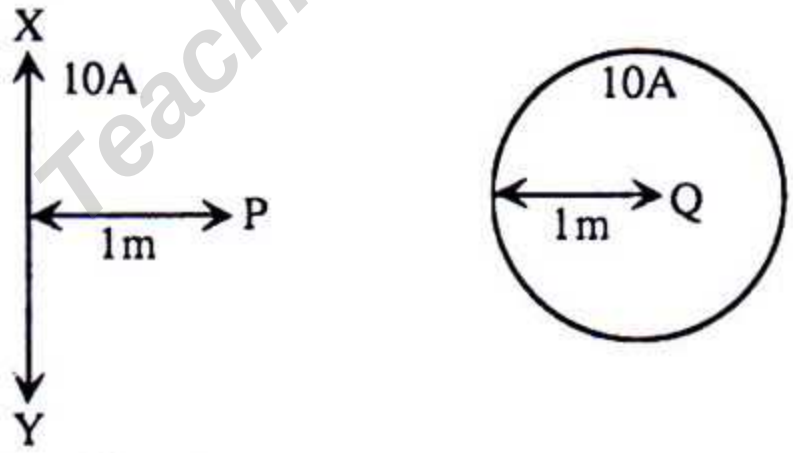

a. What is Hall-effect? 1

b. What do you mean by dip at Dhaka is 31°N? 2

c. Calculate the magnetic field at the 'P' in stem due to the wire 'XY'. 3

Teachingbd24.com

d. At which point of 'P' and 'Q' the value of magnetic field will be more? Explain mathematically. 4

7. ✪ A 50 years old astronaut travelled through a spaceship to do space exploration and returned on earth after 30 years. [Mass and the velocity of the spaceship is 720 kg and 725×10^9 m/sec and the velocity of light is 3×10^8]

a. What is nucleon? 1

b. Why the velocity of an object cannot be equal to the velocity of light? 2

c. Calculate the age of the astronaut on earth. 3

d. What will be the change of original mass of the spaceship? Explain mathematically. 4

8. ▶ A coil of mean area 100 cm^2 and having 200 turns is held of perpendicular to a uniform magnetic field 0.2×10^{-4} tesla. The coil is then turned through 180° in $\frac{1}{10}$ sec.

[Mirzapur Cadet College, Tangail]

a. What is called extrinsic semiconductor? 1

b. Explain how matter possesses magnetic property naturally. 2

c. Determine the value of emf induced in the coil. 3

d. Explain with proper mathematics the nature of the current induced in the coil when it is turned through 360° with the same speed as before. 4

Teachingbd24.com

Model Question of HSC Examination 2020 (All Board)

Physics Second Paper (MCQ)

Sub Code : 1 7 5

Time : 35 Minutes

Full Marks : 35

[N.B. Fill the circle of the correct answer with a black ball point pen. Each question bears 1 mark.]

1. The process of production of heat due to rubbing of two objects is—
ⓐ Reversible ⓑ Irreversible
ⓒ Adiabatic ⓓ Isothermal

2. The direction of electric field determines by—
ⓐ Point charge ⓑ Test charge
ⓒ Bound charge ⓓ Free charge

3. The peak value of an alternating electromotive-force is 20V. Its root mean square value is—
ⓐ 14.0V ⓑ 14.24V
ⓒ 14.14V ⓓ 14.44V

4. By Fermat's principle we can explain—
i. reflection of light
ii. refraction of light
iii. polarization of light
Which one is correct?
ⓐ i & ii ⓑ ii & iii
ⓒ i & iii ⓓ i, ii & iii

At minimum deviation position of a prism the angle of incidence is 40°. THe angle of the prism is 50°.

5. The angle of refraction at the first face is—
ⓐ 20° ⓑ 30°
ⓒ 25° ⓓ 40°

6. The angle of incidence at the second face is—
ⓐ 10° ⓑ 15°
ⓒ 20° ⓓ 25°

7. The half-life of radon is 4 day. Its average life is—
ⓐ 5.77 day ⓑ 4.33 day
ⓒ 3.77 day ⓓ 1.77 day

8. At which state of the system the entropy is minimum?
ⓐ Liquid ⓑ Plasma
ⓒ Gaseous ⓓ Solid

9. The path difference between two points of a wave is $\frac{\pi}{4}$. The phase difference between them is—
ⓐ $\frac{\pi}{2}$ ⓑ $\frac{\pi}{3}$
ⓒ $\frac{\pi}{4}$ ⓓ $\frac{\pi}{6}$

10. The phenomenon related to the particle nature is—
i. photoelectric effect
ii. Compton effect
iii. Doppler effect
Which one is correct?
ⓐ i & ii ⓑ ii & iii
ⓒ i & iii ⓓ i, ii & iii

11. The ratio of magnetic field ($\bar{B}$) to magnetic intensity ($\bar{H}$) is called—
ⓐ magnetic retentivity
ⓑ remanence
ⓒ mag. Susceptibility
ⓓ mag. permeability

12. Oil drops look colored in water— Which optical phenomenon does it support?
ⓐ Diffraction ⓑ Interference
ⓒ Polarization ⓓ Refraction

Teachingbd24.com

13. Which one is correct in the case of adiabatic expansion?
ⓐ Work is done on the system
ⓑ Temperature remians constant
ⓒ Internal energy decreases
ⓓ heat is released

14. 2 A current is flowing in a coil of radius 1.57 cm having 1000 turns. The magnetic field at the Centre of the coil is—
ⓐ 1.275×10^{-2}T ⓑ 2.55×10^{-2}T
ⓒ 4×10^{-2}T ⓓ 8×10^{-2}T

15. Which one of the following waves have the maximum wavelength?
ⓐ Infrared rays ⓑ Radio waves
ⓒ Visible light ⓓ Ultraviolet rays

16. In the case of an electric dipole—
i. Electric dipole moment is a vector quantity
ii. Electric intensity is maximum on the axis of a electric dipole
iii. Electric potential is maximum on the bisector of an electric dipole
Which one is correct?
ⓐ i & ii ⓑ i & iii
ⓒ ii & iii ⓓ i, ii & iii

17. The focal lengths of the objective and the eyepiece of a telescope are 4m and 80cm respectively. What is the magnification of the telescope for focusing at infinity?
ⓐ 4.8 ⓑ 5
ⓒ 6.56 ⓓ 20

18. The unit of magnetic flux is—
i. Weber ii. $Tesla^{-m^2}$
iii. N/A^{-m}
Which one is correct?
ⓐ i & ii ⓑ ii & iii
ⓒ i & iii ⓓ i, ii & iii

19. Thermometer is constructed on the basis of which law of thermodynamics?
ⓐ Zeroth law ⓑ First law
ⓒ Second law ⓓ Third law

20. What is the value of angle of dip at the equatorial region?
ⓐ 0° ⓑ 30°
ⓒ 45° ⓓ 90°

21. Pulser is a–
ⓐ Black hole ⓑ White dwarf
ⓒ Neutron star ⓓ Supernova

22. Which of the following cannot be explained on the basis of Huygenes's principle?
ⓐ Diffraction ⓑ Interference
ⓒ Refraction ⓓ Polarization

23. If the energy of the 1st orbit of an atom be E then what is it energy of the nth orbit?
ⓐ $\frac{E_1}{n}$ ⓑ $\frac{E_1}{n^2}$
ⓒ nE_1 ⓓ n^2E_1

24. The equation of the stored energy of a charger capacitor is—
ⓐ $U=\frac{1}{2}eV^2$ ⓑ $U=\frac{1}{2}e^2V$
ⓒ $U=\frac{1}{2}QV$ ⓓ $U=\frac{1}{2}QV^2$

25. Which of the following physical quantity does not change in an adiabatic process?
ⓐ Temperature ⓑ Volume
ⓒ Entropy ⓓ Pressure

Ans.																										
	1	ⓑ	2	ⓑ	3	ⓒ	4	ⓐ	5	ⓒ	6	ⓓ	7	ⓐ	8	ⓓ	9	ⓐ	10	ⓐ	11	ⓓ	12	ⓑ	13	ⓒ
	14	ⓓ	15	ⓑ	16	ⓐ	17	ⓑ	18	ⓐ	19	ⓐ	20	ⓓ	21	ⓒ	22	ⓓ	23	ⓑ	24	ⓒ	25	ⓒ		

Teachingbd24.com